卷册检索号 SEARCH NO. OF THE VOLUME
MLHVDC-LCS-CET-DD-GL-0104 49-B60011S-Z0104

第 1 页 共 1 页
PAGE OF

图纸文件目录（首页）

CATALOG OF DRAWING DOCUMENTS (HEAD PAGE)

拉合尔±660kV换流站 工程 施工图 阶段
±660kV Lahore Converter Station PROJECT Detail Design DESIGN STAGE

总图 专业 第 01 卷 第 04 册
General layout SPECIALITY VOLUME BOOK

卷册 名称 交流滤波器场设备围栏及围栏内地坪图
Volume name Fence and ground inside fence for ACF yard

批 准 APPROVED BY	田良玉
审 核 REVIEWED BY	杨素娟
设计/勘测 DESIGNED BY/ SURVEYED BY	程建
图纸 1 张 DRAWING NOS.	打印件 / 本 PRINTED COPIES NOS.

序号 No.	图 号 DRAWING NO.	文件名称 DOCUMENT TITLE	版本 EDITION	张 NOS.	本 NOS.	备注 REMARKS
1	49-B60011S-Z0104-001	交流滤波器场围栏布置图 Layout of fence for ACF yard	B	1		

注:

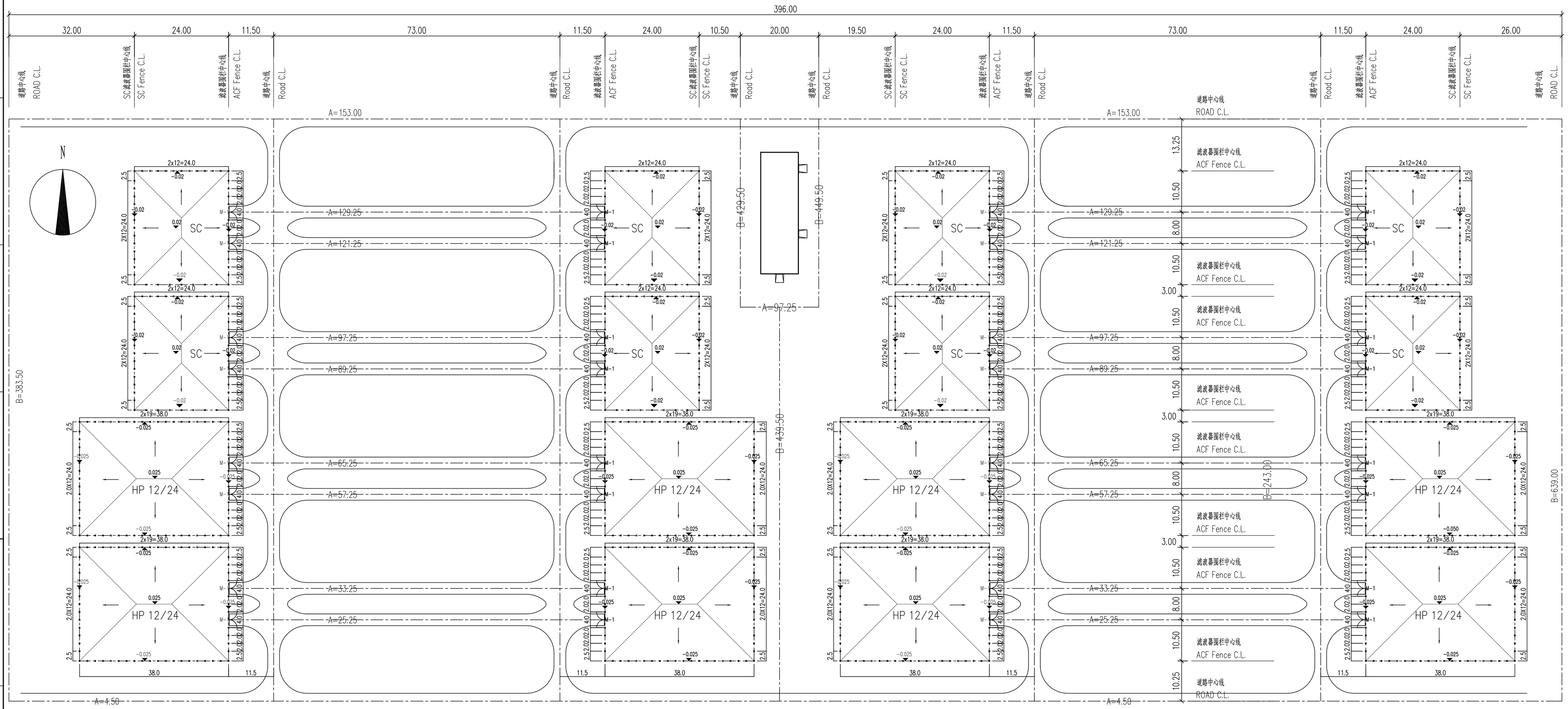

交流滤波器场围栏布置图 SCALE 1:500

Layout of fence for ACF yard

说明:

1. 图中尺寸单位除注明外均为m.
2. 滤波器设备围栏和地坪硬化详图做法见华东院图纸30-B003701S-T0313-003图.
3. 地坪顶面平均设计标高为193.55m，注意靠近围栏的道路端头坡向围栏内，与围栏内硬化标高平接. 围栏内排水坡度0.3%，平整度≤0.3mm，面层排水畅通，无积水现象.
4. 硬化地坪四周倒圆角，R=30mm.

NOTES:

1. All dimensions are in meter, unless otherwise noted.
2. The ACF fence and ground hardening practices are shown in the ECEPDI drawing 30-B003701S-T0313-003.
3. The average design elevation of the top surface of the floor is 193.55m. Note that the end of the road near the fence slopes into the fence, which is the same as the hardened elevation inside the fence.The drainage slope in the fence is 0.3%, the flatness is ≤0.3mm, the surface drainage is smooth, and there is no water accumulation.
4. The ground inside fence should be chamfering , R=30mm .

交流滤波器场围栏及基础工程量表

List of Fence and foundation of ACF yard

序号 No.	名称 Name	围栏长度(m) length of fence	M-1数量(扇) Number of gates M-1	围栏内地坪数量(m²) Number of ground inside fence
1	SC	98X8	2X8	(29.3x24.3)X8
2	HP 12/24	126X8	2X8	(29.3x38.3)X8
	共计 TOTAL	1792	32	14673.44

Reference Drawings

Drwg. No.	Title

Revisions

	Name	Date	Notes

巴基斯坦默蒂亚里-拉合尔±660kV直流输电工程

±660kV HVDC Project from Matiari to Lahore in Pakistan

NATIONAL TRANSMISSION & DESPATCH COMPANY (NTDC) LIMITED PAKISTAN

CONTRACTOR 国家电网 STATE GRID 中国电力技术装备有限公司 CHINA ELECTRIC POWER EQUIPMENT AND TECHNOLOGY CO.,LTD.

拉合尔±660kV换流站

±660kV Lahore Converter Station

设计阶段 PHASE: 施工图 Detail Design

M L H V D C - L C S - C E T - D D - G L - 0 1 0 4 - 0 0 1 B

	姓名 Name	日期 Date
设计 Designed	张健	2019.12.03
校核 Checked	赵彬	2019.12.03
审核 Reviewed	杨孝瑞	2019.12.03
批准 Approved	田良贤	2019.12.03

交流滤波器场围栏布置图

Layout of fence for ACF yard

比例 Scale: | 图号 DWG NO.: 49-B60011S-Z0104-001 | 版本 REV.: B

专业 Speciality	会签 Sign	日期 Date
电一	范上海	2019.12.03
电一	吉小威	2019.12.03

594X841

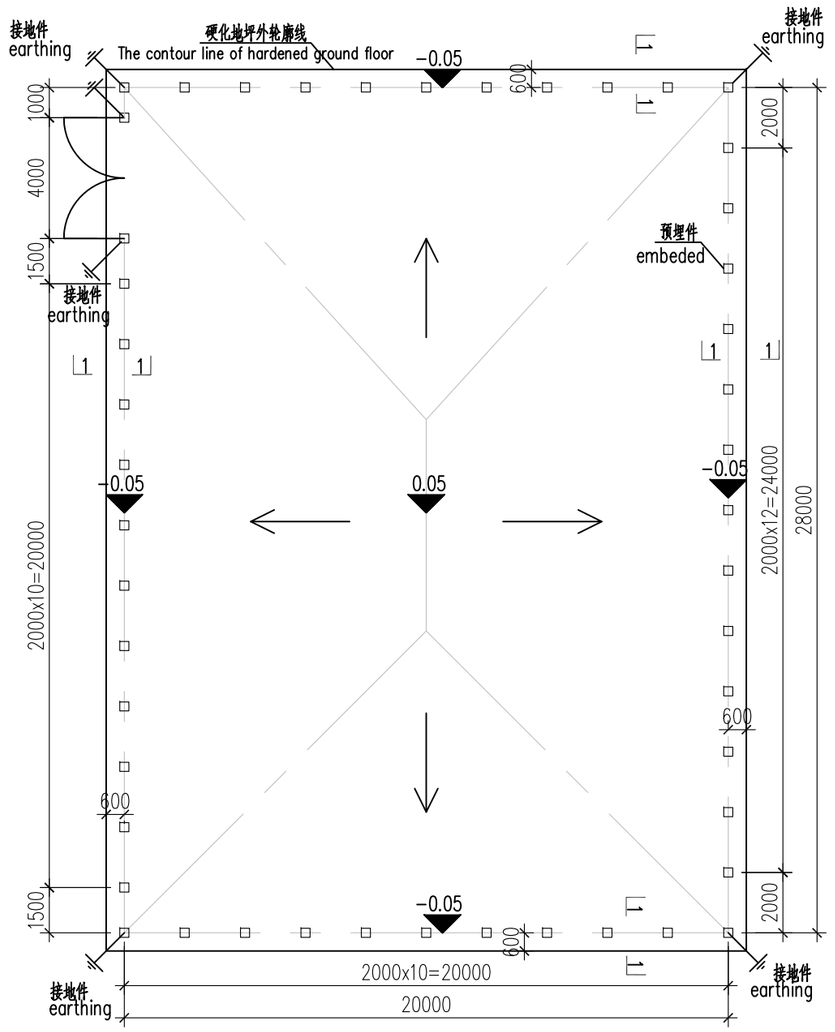

围栏基础及埋件布置图

THE LAYOUT OF THE FOUNDATION AND EMBEDED PART

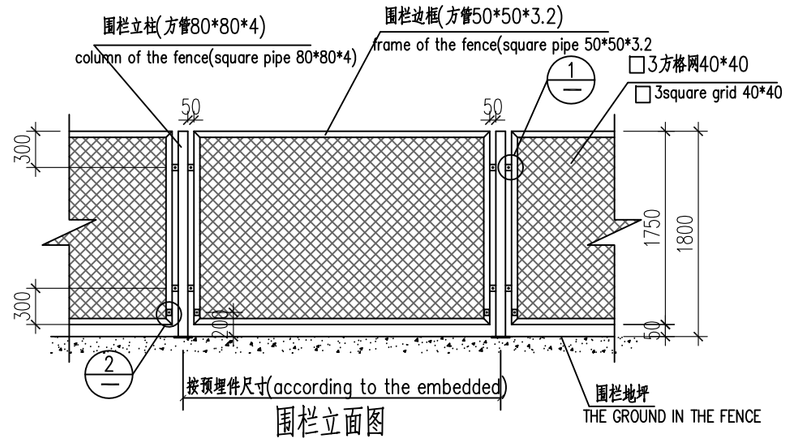

围栏立面图

VERTICAL VIEW OF THE FENCE

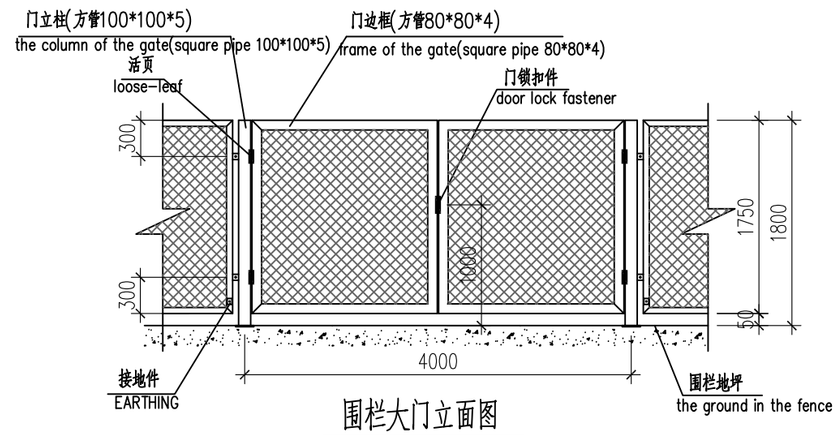

围栏大门立面图

VERTICAL VIEW OF THE GATE OF THE FENCE

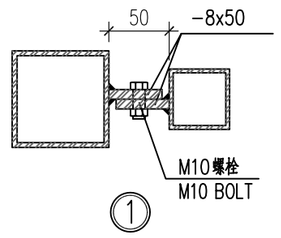

①

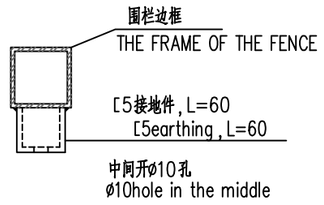

②

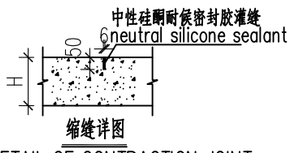

DETAIL OF CONTRACTION JOINT

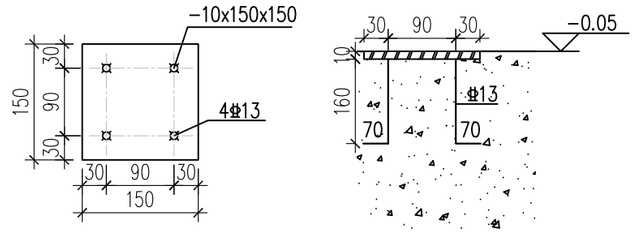

预埋件

EMBEDDED

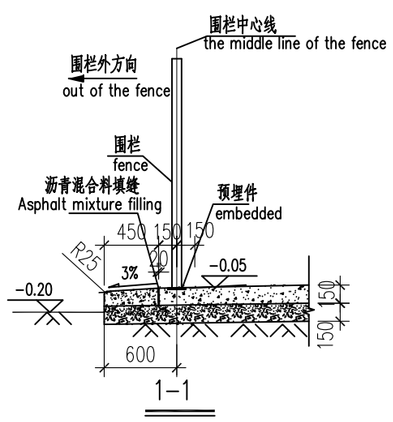

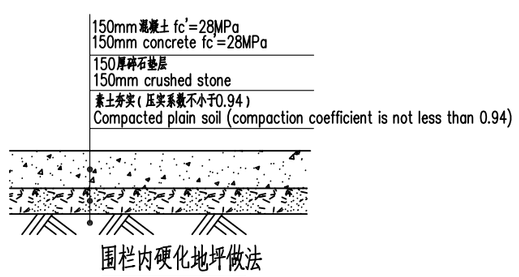

围栏内硬化地坪做法

THE METHOD OF HARDENED GROUND FLOOR INSIDE THE FENCE

说明:

1、直流场围栏内场地平均标高±0.000相当于绝对标高193.60(EGM2008高程系统)。
如无特别说明，本工程标高均采用相对标高。
2. 围栏内地坪施工150mm混凝土层(fc'=28MPa)时应向四周围栏找坡。
3. 钢丝网围栏，网门均热镀锌防腐；所有外露铁件均需热镀锌处理。
4. 围栏大门采用钢丝网门,双扇门,B=4000.
5. 围栏内邻近电缆沟时地坪浇至电缆沟边，围栏内地坪须在设备埋管完成后再浇注。
6. 围栏内地坪150mm混凝土层(fc'=28MPa)应设置4mx4m网格状缩缝，做法见缩缝详图，
露出地面基础与地坪相接处应设置20mm胀缝，沥青混合料填缝。
7. 围栏为镀锌钢质，高1.8m，网孔不大于40mmx40mm。
8. 围栏内硬化地坪下方铺设接地网和埋管，土建施工时应注意施工顺序。

Note:

1. The average site level of ±0.000 is equal to the absolute elevation of 193.60 (geodestic datum system EGM2008) If not specified,the elevations of the project are adopt to the relative elevation.
2. When the 150mm concrete layer (fc'=28MPa) is built in the fence, the slope should be made around the surrounding fence.
3. Wire mesh fence, net door all need to be hot galvanized against corrosion; all exposed iron parts need to be hot galvanized.
4. The gate of the fence is a wire mesh double door,B=4000.
5. The ground should be cast after laying the buried pipe of the equipment.
6. The 150mm concrete layer (fc'=28MPa) in the ground of the fence should be set up with 4mx4m mesh contraction joints, see the detail of contraction joint. The 20mm expansion joint should be set between the foundation and the ground, and the asphalt mixture should be filled in.
7. The fence is made of glacanized steel, 1.8m high. The mesh shouldn't be more than40mmx40mm.
8. The grounding grid and buried pipe are laid under the hardened floor in the fence, and the construction order should be organized.

电气	郑煜	2018.12.08
专业 Speciality	会签 Sign	日期 Date

Reference Drawings

Drwg. No.	Title

Revisions

	Name	Date	Notes

巴基斯坦默蒂亚里—拉合尔±660kV直流输电工程

±660kV HVDC Project from Matiari to Lahore in Pakistan

NATIONAL TRANSMISSION & DESPATCH COMPANY (NTDC) LIMITED PAKISTAN

CONTRACTOR 国家电网 STATE GRID 中国电力技术装备有限公司 CHINA ELECTRIC POWER EQUIPMENT AND TECHNOLOGY CO.,LTD.

SUBCONTRACTOR East China Electric Power Design Institute Co.,Ltd.

拉合尔±660kV换流站

±660kV Lahore Converter Station

设计阶段 PHASE: 施工图 Detail Design

M L H V D C - L C S - E C I - D D - C S - 0 3 1 3 - 0 0 3 A

	姓名 Name	日期 Date
设计 Designed	徐财寿	2018.12.08
校核 Checked	古韬 魏德	2018.12.08
审核 Reviewed	邹德清	2018.12.08
批准 Approved	杨飞	2018.12.08
比例 Scale	1:100	图号 DWG NO.

围栏详图

The detail of the Fence

30-B003701S-T0313-003

版本 REV. A

420X594